CABINET SYSTEM

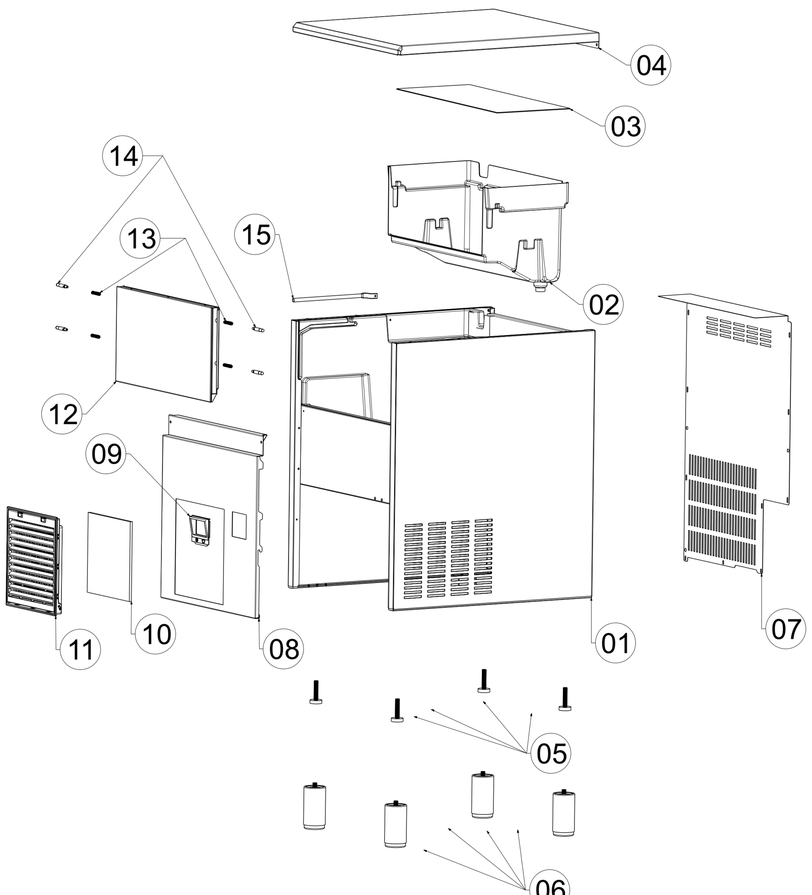

PART NO	UA026	UA027	UA028	UA029	EXPLANATIONS
01	5500300100	5500030100	5500290100	5500400100	P.U Body Pack
02	1102130100	1100020100	1101310100	1102590100	Reservoir
03	1100130200	1100130100	1100130100	1100130300	Evaporator Cover Plastic
04	1101950100	1100320100	1100320100	1102310100	Top Panel
05	1113480100	1113480100	1113480100	1113480100	Adjustable Small Foot
06	1100340200	1100340200	1100340200	1100340200	Adjustable Big Foot
07	1101990100	1100300100	1101350100	1102330100	Rear Panel
08	1108340100	1108210100	1108400100	1108390100	Front Panel V3
09	1106670100	1106670100	1106670100	1106670100	Button Frame
10	-	1100510100	1100510100	1100510100	Air Filter Sponge
11	-	5500130100	5500130100	5500130100	Air Filter Group
12	5500460100	5500040100	5500040100	5500470100	Door Pack
13	1111490100	1111490100	1111490100	1111490100	Door Spring
14	1111500100	1111500100	1111500100	1111500100	Door Pin
15	1102400300	1102400100	1102400100	1102400200	Bulp Pipe

WATER DISTRIBUTION

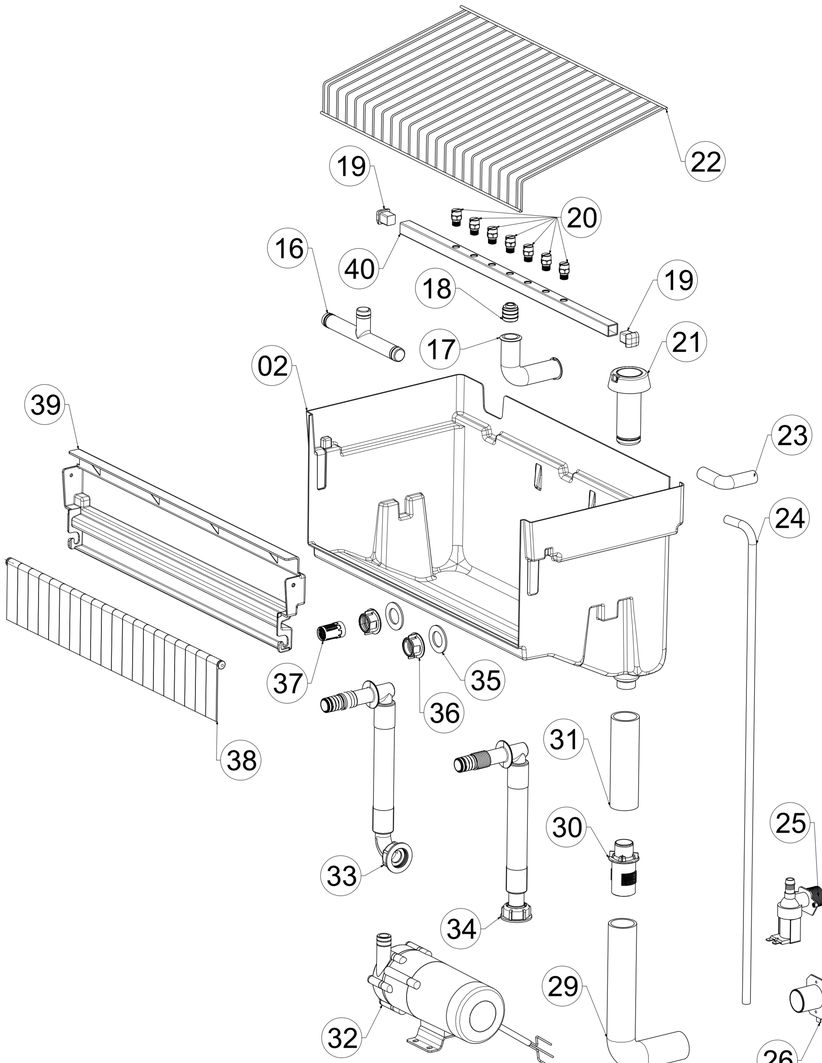

PART NO	UA026	UA027	UA028	UA029	EXPLANATIONS
02	1102130100	1100020100	1101310100	1102590100	Reservoir
16	-	-	1101910100	1101910100	Plastic T Profile
17	1100840100	1100840100	1100840100	1100840100	Sprayer Bar Inlet Elbow
18	1102440100	1102440100	1102440100	1102440100	Sprayer Bar Inlet Nut
19	1100140100	1100140100	1100140100	1100140100	Sprayer Bar Plug
20	1105960100	1105960100	1105960100	1105960100	Sprayer
21	5500170100	5500170100	5500170100	5500170100	Reservoir Water Level Plastic Group
22	1102070100	1100220100	1100220100	1102410100	Slider
23	1104760100	1104760100	1104760100	1104760100	Evaporator Water Inlet Elbow
24	1100570100	1100570300	1100570400	1104570500	Water Inlet Hose 3/8"
25	1100560100	1100560100	1100560100	1100560100	Water Inlet Valve
26	1100860100	1100860100	1100860100	1100860100	Water Outlet Plastic
27	1106330100	1106330100	1106330100	-	Hose Support
28	-	-	-	1104420100	Hose Support FR70/90/100
29	1101940100	1101940100	1101940100	1101940100	Water Outlet Elbow
30	1100190100	1100190100	1100190100	1100190100	Body Water Drain Plastic
31	1101520200	1101520100	1101520300	1101520400	Hose 1"
32	1102190100	1102190100	1100600100	1117360100	Water Pump
33	5503360100	5503360300	5503360400	5503360500	Water Return Hose
34	5503370100	5503370300	5503370400	5503370500	Water Discharge Hose
35	1100850100	1100850100	1100850100	1100850100	Sealing Gasket
36	1100170100	1100170100	1100170100	1100170100	Fittings Locking Nut
37	1100500100	1100500100	1100500100	1100500100	Water Filter
38	5500510100	5500160100	5500160100	5500710100	Curtains
39	1101750100	1100040100	1100040100	1101890100	Reservoir Front Plastic

PART NO	UA026	UA027	UA028	UA029	EXPLANATIONS
40	1102120100	1100750100	1106390100	1102380100	Sprayer Bar

COOLING SYSTEM R290

REV05 / JANUARY 2025

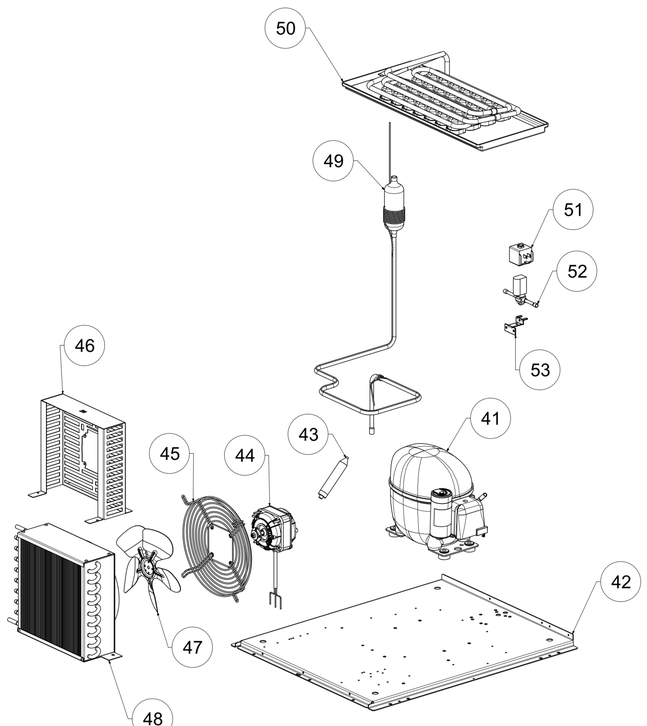

PART NO	UA026	UA027	UA028	UA029	EXPLANATIONS
41	1108430100	1108430100	1110790100	1110190100	Compressor
42	1102090100	1104020100	1104020100	1102340100	Compressor Assembly Sheet
43	1100390100	1100390100	1100390100	1102910100	Dryer
44	1100370100	1100370100	1100370100	1100370200	Fan Motor
45	-	1112730100	1112730100	1104910100	Fan Blade Cover
46	1111940100	-	-	-	Fan Motor Assembly Sheet
47	1100380100	1100380100	1100380100	1100380300	Fan Blade
48	1108450100	1110320100	1110330100	1110350100	Condenser
49	1111900100	1105660100	1105670100	1105680100	Heat Exchanger
50	5500540100	5500200100	5501060100	5500640100	Evaporator
51	1114610100	1114610100	1114610100	1114610100	Hot Gas Valve Coil
52	1114600100	1114600100	1114600100	1114600200	Hot Gas Valve
53	1102240100	1102240100	1102240100	1102240100	Hot Gas Valve Bracket

ELECTRONIC CONTROLLER

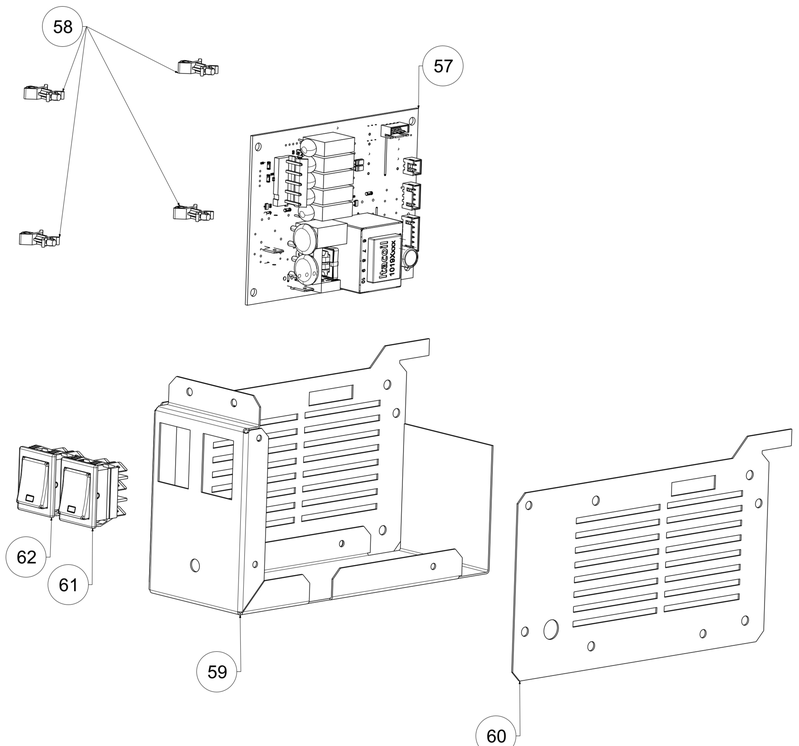

PART NO	UA026	UA027	UA028	UA029	EXPLANATIONS
57	1105600100	1105600100	1105600100	1105600100	Motherboard
58	1106060100	1106060100	1106060100	1106060100	Motherboard Holder
59	1108950100	1108950100	1108950100	1108950100	Motherboard Box Sheet
60	1108960100	1108960100	1108960100	1108960100	Motherboard Box Sheet Cover
61	1105950100	1105950100	1105950100	1105950100	Cleaning Button
62	1106040200	1106040200	1106040200	1106040200	Power Switch
63	1101490100	1101490100	1101490100	1101490100	Probe Ice Bin
64	1103010100	1103010200	1103010200	1103010300	Probe Evaporator - Condenser

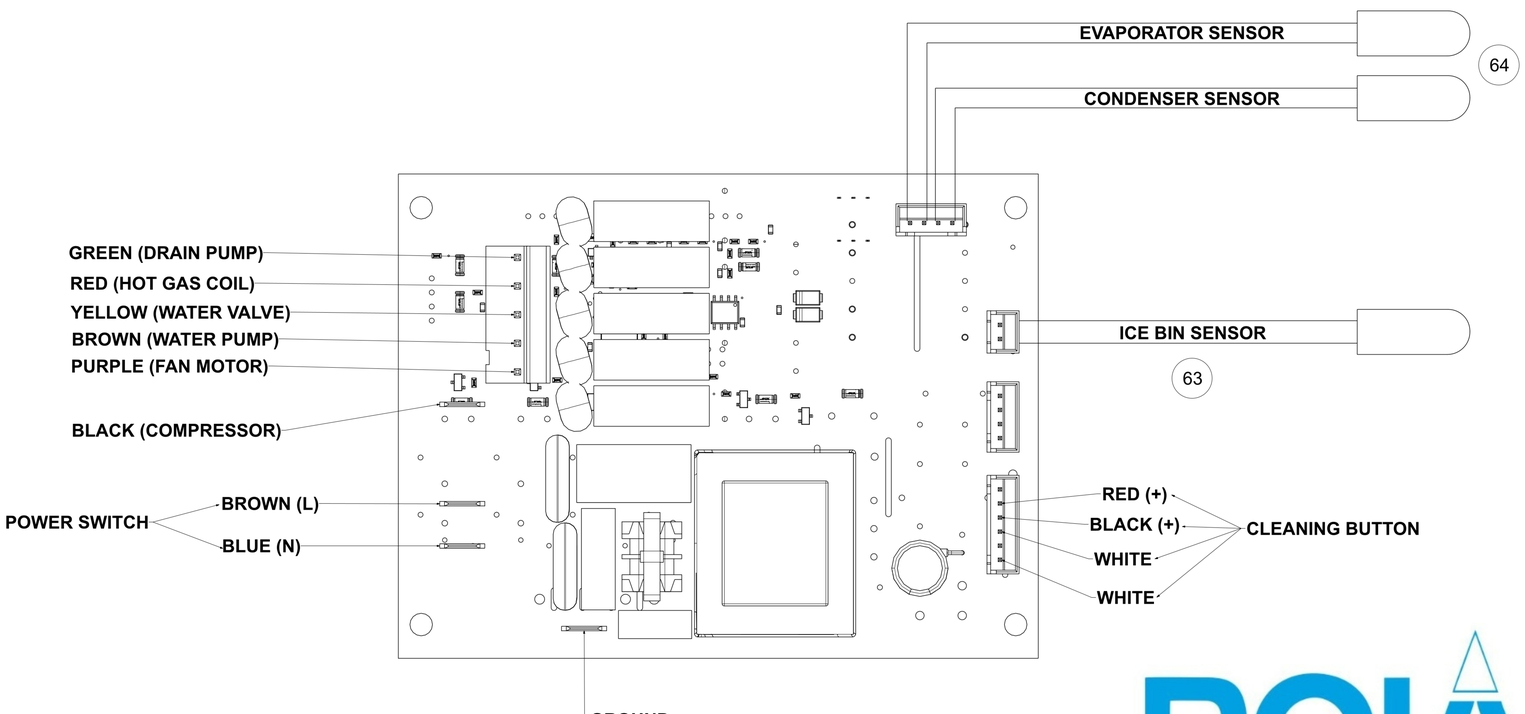

POLAR

DRAIN PUMP INSTALLATION

REV05 / JANUARY 2025
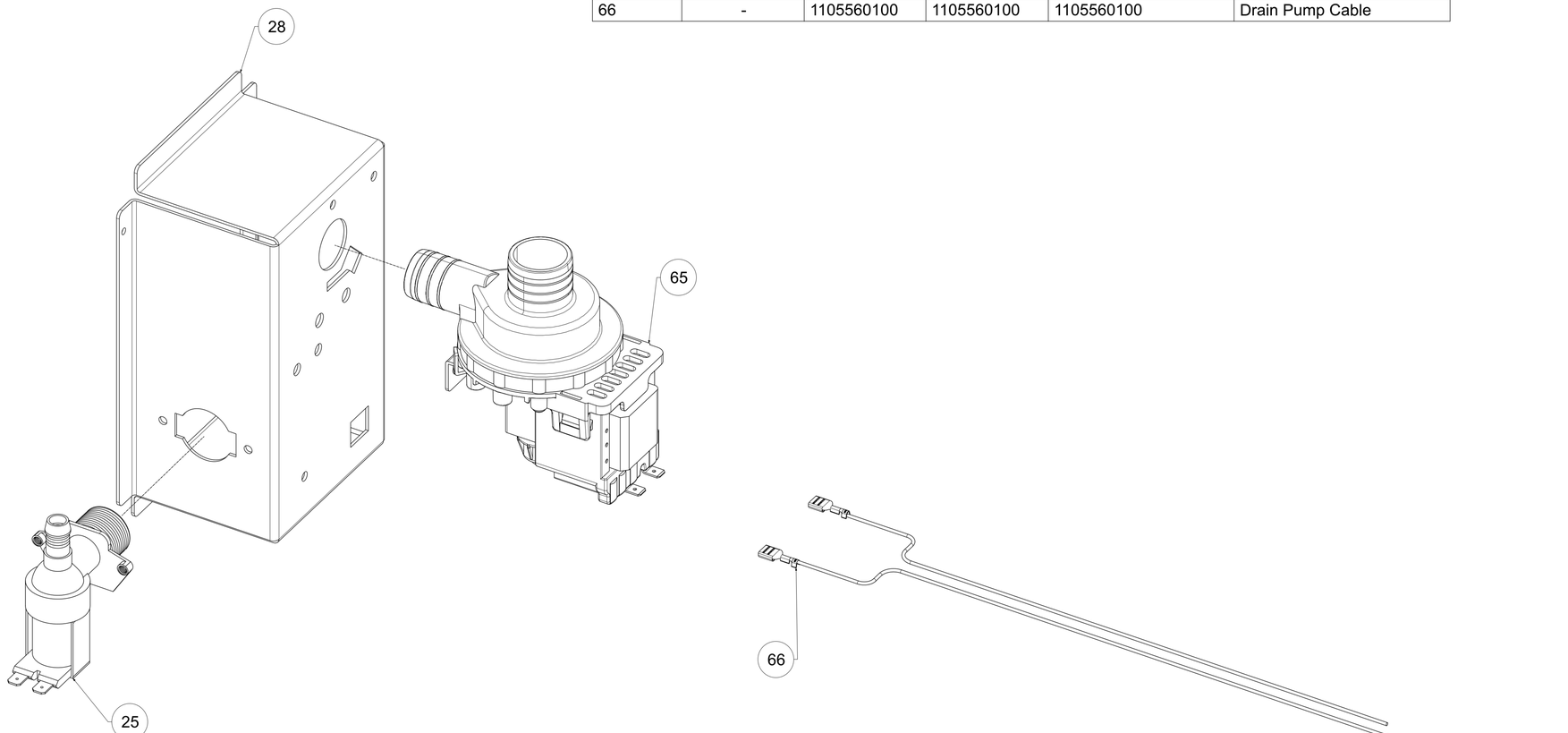
PART NO	UA026	UA027	UA028	UA029	EXPLANATIONS
25	-	1100560100	1100560100	1100560100	Water Inlet Valve
28	-	1104420100	1104420100	1104420100	Hose Support
65	-	1103610100	1103610100	1103610100	Drain Pump
66	-	1105560100	1105560100	1105560100	Drain Pump Cable